©1999, 2004 Cequent Towing Products

SHEET 1 OF 1	N24682	N77115	5-25-04	A

INSTALLATION INSTRUCTIONS

VEHICLE

FORD FOCUS WAGON

2000 LB MAX GROSS TRAILER WT
200 LB MAX TONGUE WEIGHT
DO NOT EXCEED TOWING VEHICLE RATINGS

EQUIPMENT REQUIRED:
WIRING ACCESS LOCATION: PC3, PC4
DRILL BITS:
HITCH REQUIRES 1/2" PIN & CLIP
WRENCHES: (TIGHTEN ALL FASTENERS WITH TORQUE WRENCH) 7/8

NOTE: FASTENERS TYPICAL BOTH SIDES

HITCH SHOWN IN PROPER POSITION

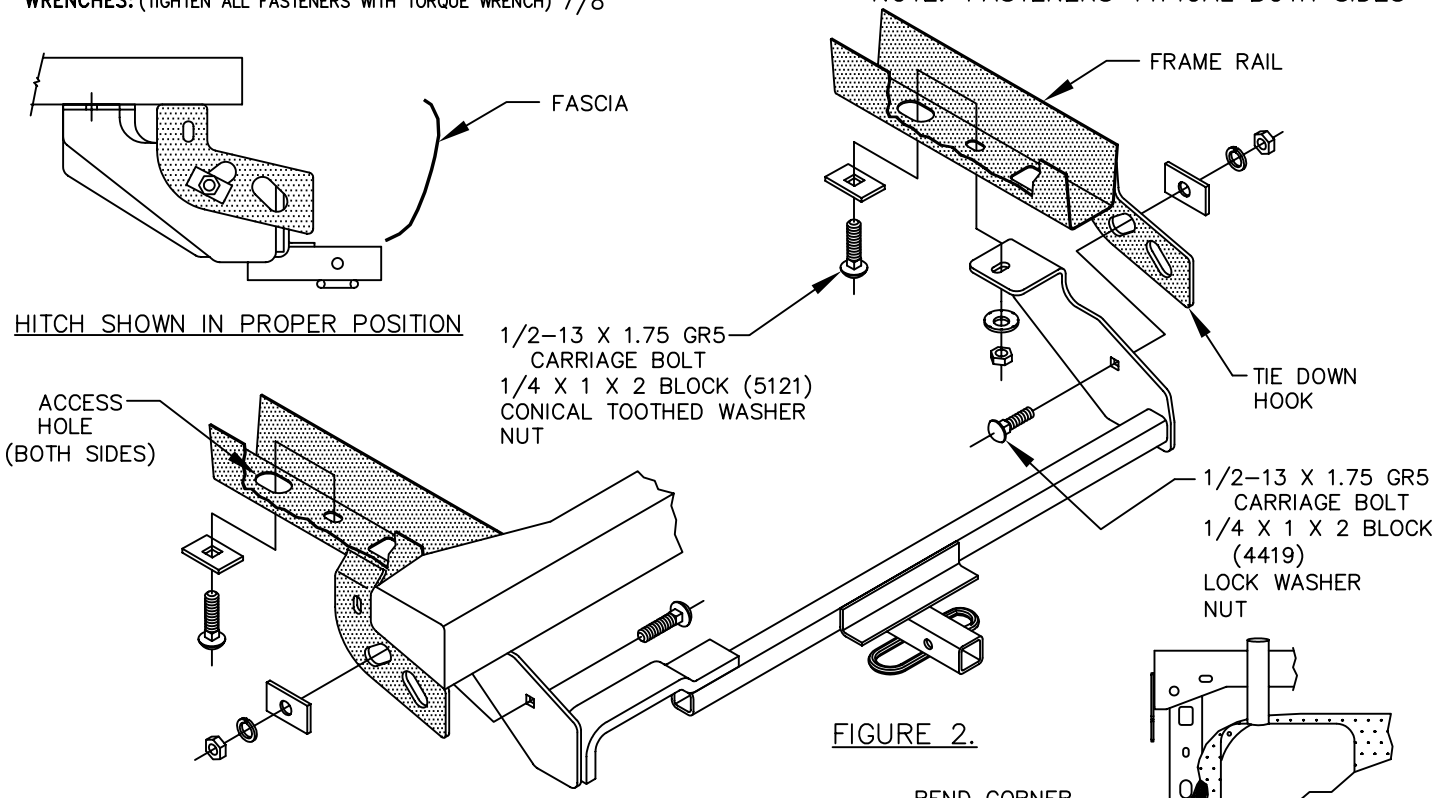

FIGURE 2.

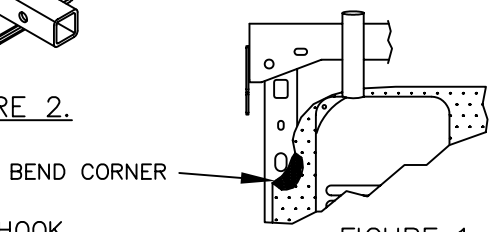

FIGURE 1.

1. SLIDE THE RUBBER EXHAUST HANGER OFF OF EXHAUST HANGER HOOK.
2. BEND CORNER OF MUFFLER HEAT SHIELD DOWN TO INCREASE CLEARANCE TO ACCESS HOLE ON DRIVER'S SIDE FRAME – SEE FIGURE 1.
3. RAISE HITCH INTO POSITION AND LOOSELY INSTALL THE REARWARD FASTENERS.
4. FISHWIRE CARRIAGE BOLT AND BLOCK THRU ACCESS HOLE IN FRAME RAIL, BOTH SIDES, AS SHOWN.
5. INSTALL REMAINING FASTENERS AS SHOWN – SEE FIGURE 2.
6. REATTACH RUBBER EXHAUST HANGER.

TIGHTEN ALL 1/2 GR5 FASTENERS TO 75 LB-FT.

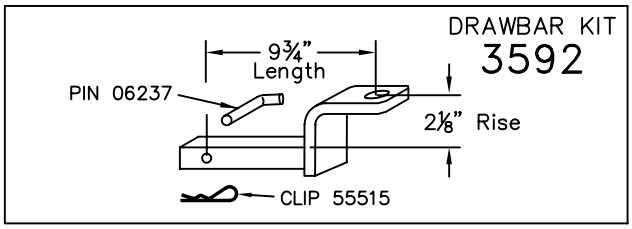

USE ONLY THE DRAWBAR SHOWN FOR CORRECT BUMPER CLEARANCE AND HEIGHT.
DRAWBAR MUST BE USED IN THE RISE POSITION ONLY.

THIS PRODUCT COMPLIES WITH SAFETY SPECIFICATIONS AND REQUIREMENTS FOR CONNECTING DEVICES AND TOWING SYSTEMS OF THE STATE OF NEW YORK, V.E.S.C. REGULATION V-5 AND SAE J684.

APPROX WEIGHT (LB.)	FASTENER KIT
27	K24682

NOTE: Check hitch frequently, making sure all fasteners and ball are properly tightened. If hitch is removed, plug all holes in trunk pan or other body panels to prevent entry of water and exhaust fumes. A hitch or ball which has been damaged should be removed and replaced. Observe safety precautions when working beneath a vehicle and wear eye protection. Follow car maker's specs for maximum trailer weight and tongue weight. Do not cut access or attachment holes with a torch.

TOWING PRODUCTS
Plymouth, Michigan